# BEAWER PT-1

User Guide

# About

This document describes operation of BEAWER PT-1 prototype device and related PC application BeawerMet, made by LOX Technologies.

BEAWER, which stems from Boosting Heater Power Controller, is a compact device enabling precision testing and characterization of MEMS (micro-electro-mechanical) heater devices based on platinum heating elements. This involves e.g. heating subsystems of range of MEMS gas sensors or elements in microreactors for desktop chemical analysis. BEAWER can be operated directly from a PC (through USB connection) and supports precision 4-wire measurement of resistance of the heating element. Embedded DC/DC converters in BEAWER supply up-to 25V, 1A, 5W of heating power, which is suitable for most, if not all, MEMS microheaters. At the same time, BEAWER is designed to operate by maximum possible efficiency by controlling the DC/DC step-up ratio, minimizing unnecessary power dissipation.

Though communication with BEAWER is maintained by serial interface with easy text-oriented protocol, a dedicated measurement software BeawerMet is provided to enable intuitive, user-friendly operation of the BEAWER PT-1. Besides access to current control and resistance measurements in DC or AC regime, BeawerMet supplies also automated steady-state and transient characterization of the MEMS heater under test.

The documentation enables insight into BEAWER functionality by providing schematic diagrams for hardware part and for signal processing in BEAWER firmware. The signal schemata are utilized as source to DSP-core-generating utilities prior to firmware compilation, thus, they can be treated as legitimate functional reference.

# Contents

# Basic Features

- **compact characterization of a wide range of microheater devices**
- **heater temperature feedback through continuous resistance measurement**
- **controlled DC/DC converter with up-to 25V voltage boost**
- **MOSFET-based current source up-to 1A**
- **5W max power with external supply, 2W max with USB alone**
- **heater resistance 5Ω to 2.5kΩ**
- **Kelvin (4-wire) heater resistance sensing**
- **DC or AC resistance measurement with selectable frequency and bandwidth**
- **synchronous demodulation of AC sounding signal in firmware**
- **40MIPS digital signal controller**
- **USB interface**
- **LEDs signalizing operation and overload**

# Components in Delivery

1. BEAWER PT-1 device
2. USB cable
3. $230V_{AC}$ mains supply adaptor with $5V_{DC}$ output
4. circular-connector measurement cable with 2 terminals
5. case
6. BeawerMet software (downloadable)

# Connectors and Indication

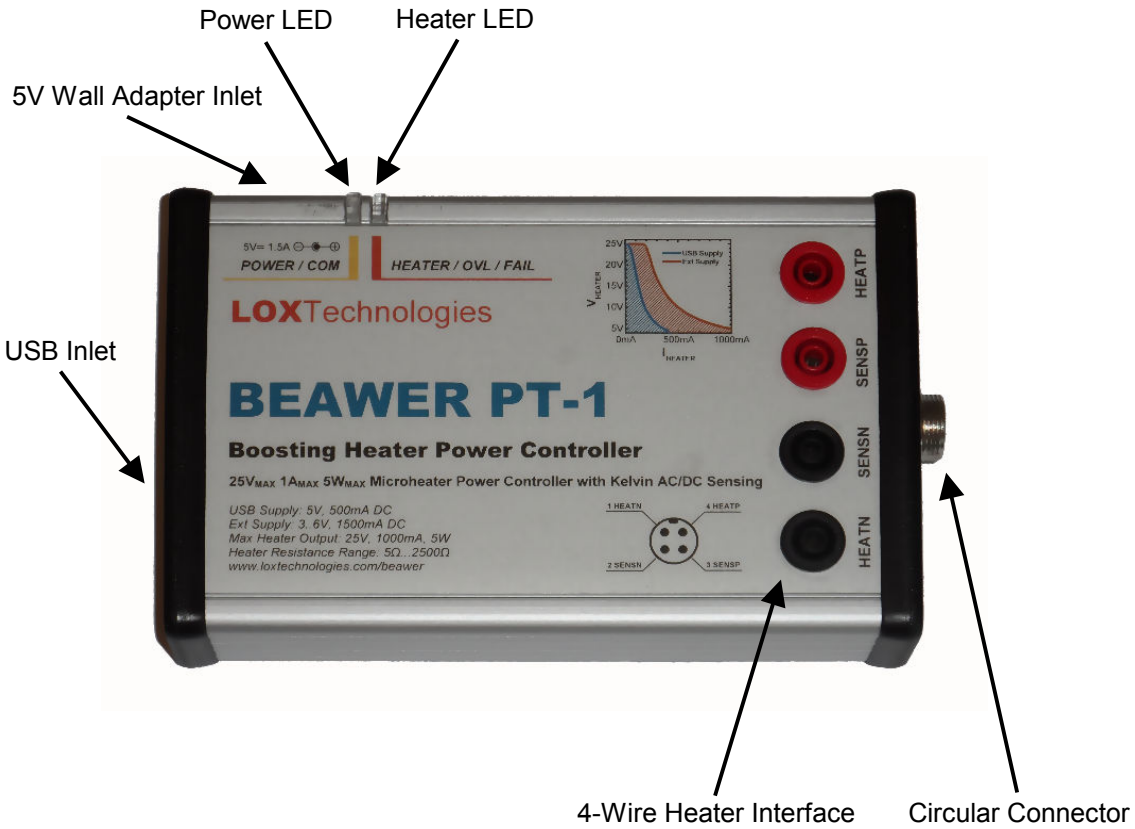


The picture above illustrates connectors and indicators at BEAWER PT-1 device.

# Operation

## Power modes

### *USB supply*

For most microheaters operating below 2W of heating power, connect the BEAWER device through standard USB cable with a PC. The voltage supply is indicating with yellow LED steady ON.

When USB power supply becomes insufficient, red LED starts blinking. Then, use 5V wall adapter to boost power supply for the device.

### *External supply*

When heating power above 2W is needed, connect both USB cable and 5V wall adapter to the BEAWER device. This configuration can be utilized for heating powers up-to 5W.

We recommend to use the delivered 5V wall adapter with 1500mA current capability. However, the adapter inlet is specified for voltages in range 3V to 6V, thus, user can optimize supply subsystem for specific conditions. Because input to the DC-DC converter is current-limited, the maximum power output cannot be guaranteed for supply voltages lower than 5V.

**Power supply above 6V can damage internal device components.**

## Heater connection

### *2-wire*

For basic heater operation, connect one heater pole with HEATN plug and the second pole with HEATP plug. The sensor inputs are internally connected with heating outputs through 1kΩ resistances, so no additional connections are necessary. This renders resistance measurement slightly less precise (adding approx. 1% error).

**Take care not to connect heater alone to SENSN and SENSP plugs, as this forces current flow through the internal resistances and may lead to excess device heating and damage.**

***Kelvin (4-wire)***

For precision heater resistance measurements utilizing Kelvin method, connect one heater pole with separate wires to HEATN and SENSN plugs, and the second pole with HEATP and SENSP plugs. For better results, use Kelvin clips with 2 plugs each for connecting heater poles (not supplied in the standard delivery).

You may utilize 4-pole circular connector along with delivered circular-connector cable with 2 terminals to provide near-to perfect measurements. The Kelvin connection is made near the terminals, thus parasite resistances are minimized. The male circular connector wiring viewed from device right side is in the picture below.

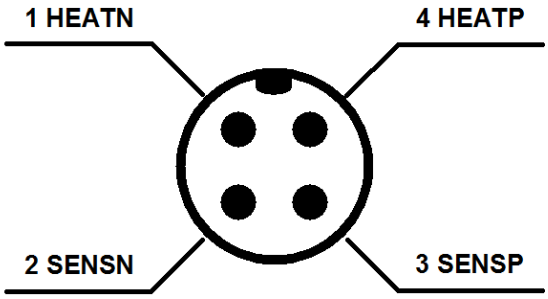


# Indication

***Power LED***

The yellow power LED indicates following states:

*Off*

Device is not operating, power supply is not provided.

*Low intensity*

Device is operating.

*Blinking low and high intensity*

Ongoing communication with PC or host system.

***Heater LED***

The red heater LED indicates following states:

*Off*

Heater voltage booster is inactive and heating power is below threshold.

*On*

Heater voltage booster is active or heating power is above threshold.

*Slow blinking*

Indication of overload. Use wall adapter to boost power supply to the device.

*Fast blinking*

Indication of fail state caused by over-current or other malfunction. In case of transient failure, device will reset is 10 seconds and revert to normal operation.

# USB port

BEAWER PT-1 involves USB/UART converter circuitry based on an FTDI device. Thus, FTDI driver must be installed to enable operation with BeawerApp or other control applications. The virtual COM port driver can be downloaded from:

http://www.ftdichip.com/Drivers/VCP.htm

After installing the driver, connect BEAWER device to the PC USB port. Then, open Device Manager, expand Ports (COM and LPT) directory and look for USB Serial Port item. If BEWER device is properly connected, the virtual port designation is indicated in parentheses behind the item (for example, COM5). Note the virtual COM port number and use it for configuration of the BeawerMet application.

# Functional Description

Basic functionality of BEAWER can be derived from a simplified schematic diagram in the picture below. Besides the microcontroller, data acquisition and communication circuitry, the two most important functional modules in BEAWER are DC-DC converter and current source.

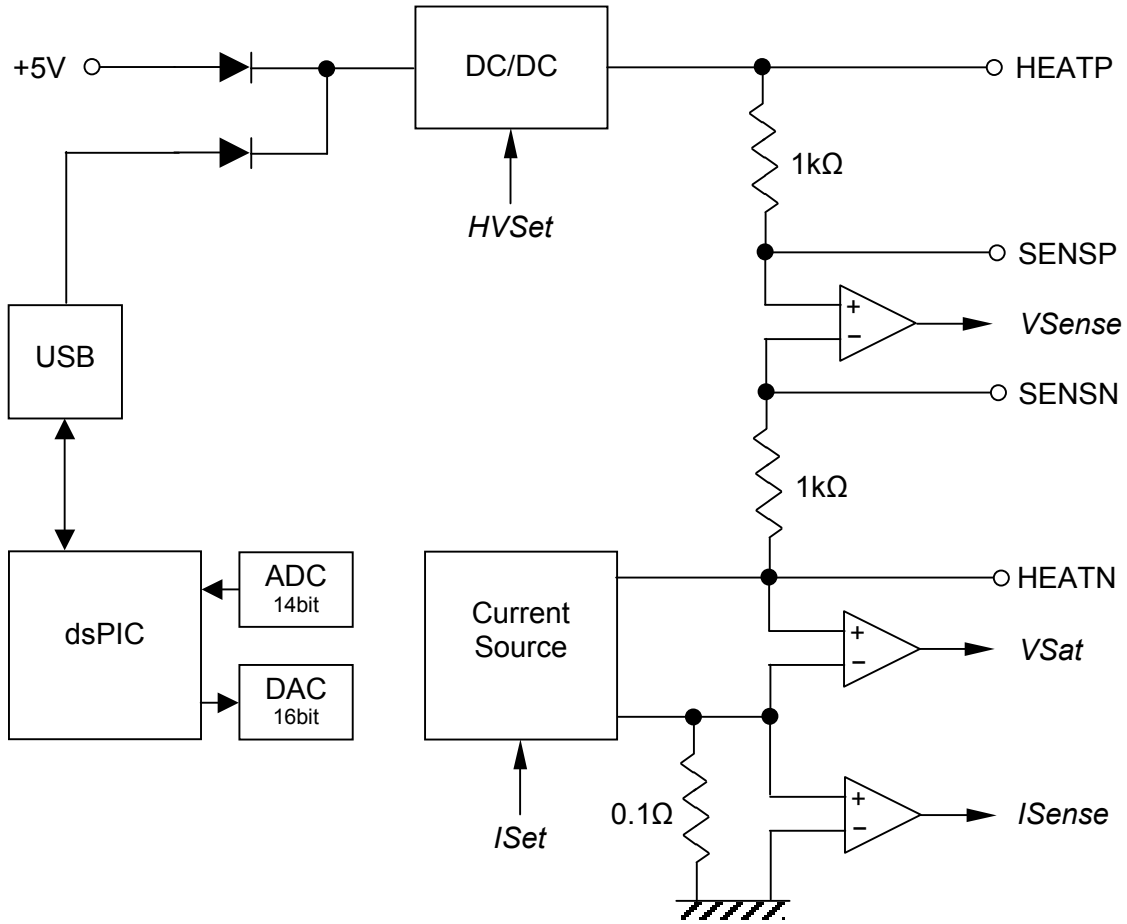


***Basic functionality***

Basic operation of BEAWER involves generation of sufficiently high voltage at HEATP plug (up to 27.5V), to enable convenient heater current control in the MOSFET-based current source. The actual current, which is returning from heater through the HEATN plug, is sensed in 0.1Ω serial resistor, amplified in a differential amplifier and then led as feedback into the current source. Voltage across heater is also processed in a differential amplifier, as well as saturation voltage across the current driver circuitry. The saturation voltage signal can be then utilized in software control of DC-DC converter voltage to minimize saturation losses, which ensures that the BEAWER current source works at maximum efficiency.

Software also derives DC resistance of heater, as well as heater and saturation power dissipations.

### *Filters*

Sensed and amplified voltage and current values are led into 3-pole low-pass Butterworth linear filters with 400Hz cutoff, build around an operational amplifier. The filters act as anti-aliases before digitalization in a 14-bit ADC, which runs at effective 4kSPS per channel. Then, microcontroller processes acquired values for actual signal range and further filters them in a 4-pole low-pass Butterworth pre-filter stage with 10Hz cutoff. Then, signals are re-sampled with much lower, variable frequency and then filtered in 5-pole Bessel low-pass stages with cutoff at 1/100-th of the sampling frequency. This enables user control of effective signal bandwidth in range of 1Hz to 10Hz, which is applicable when selecting between speed (as for transient measurements) and precision (steady-state characterization).

### *AC subsystem*

Because heater is operated in a wide range of currents and voltages, the derived DC resistance value is prone to elevated error, particularly in low-current (inactive) regime. At the same time, parasitic thermocouple voltages, mainly due to measurement terminals, can further increase the DC resistance measurement error. A possible solution to this problem is use of superposed AC signal to derive impedance of the load. Because of 4kHz sampling frequency in the analog acquisition subsystem, software generation and demodulation of AC signals in range of 100s of Hz is possible.

Desired AC current amplitude stored in parameter *IAcSet* is multiplied with generated sinus signal and superposed to wished DC current value *ISet*. This means that *ISet* must be greater or equal to the *IAcSet* value, because negative currents cannot be obtained. To ensure this, lower limits of both DC and AC current values are derived from *ISetMin* with default value of 2.5mA.

The AC values for sensed heater voltage and current are obtained in a hybrid analog/digital circuitry, which subtracts filtered (i.e. DC) values from actual signals. After subsequent amplification and anti-alias filtration, AC values are digitized, processed for correct range and then demodulated in two quadrature demodulator stages. Resulting I and Q parts for AC voltage and current signals are then filtered in the same manner as DC signals are, i.e. in an effective 9-pole low-pass filter stages with variable cutoff frequency. This ensures that high-frequency demodulation products are eliminated and resulting I and Q parts represent vectors which lengths are due to the voltage resp. current amplitude at given demodulation frequency. Then, absolute values for voltage and current vectors are evaluated and stored in *VAc* and *IAc* parameters.

Following conservative approach, the default modulation and demodulation frequency is set to 25Hz, which guaranties elimination of 50Hz power line noise and its harmonic products. Bandwidth of 3.5Hz is sufficient for transient measurements with 100ms sampling period. For more precision, reduce bandwidth down to 1Hz.

***Overload and fail conditions***

If current demand exceeds capabilities of power supply or limitations of DC-DC converter, the generated voltage at HEATP will be significantly lesser than wished *HVSet* value. This condition is sensed by subtracting *VSense* and *VSat* values from *HVSet*. If result voltage is greater than a defined threshold, overload condition is indicated by slow-blinking red LED.

In case the current or power values are off-limit, device disables DC-DC converter and current source, indicates fail state by fast blinking red LED, and after a short time, returns to normal operation. There are several other internal parameters whose anomalies may generate the fail state.

# BeawerMet

BeawerMet is PC application aimed for control of BEAWER PT-1 device and generation of heater testing and characterization data. The software together with documentation is available for download at LOX Technologies web pages at:

www.loxtechnologies.com/beawer

BeawerMet graphic user interface is split into panel of contents-selected parameters with indication of parameter name, value in decimal or discrete format and parameter unit, if applicable, and a panel with tabs for configuration, data set review and processing measurements.

## Configuration panel

Below is picture of BeawerMet GUI with active configuration panel.

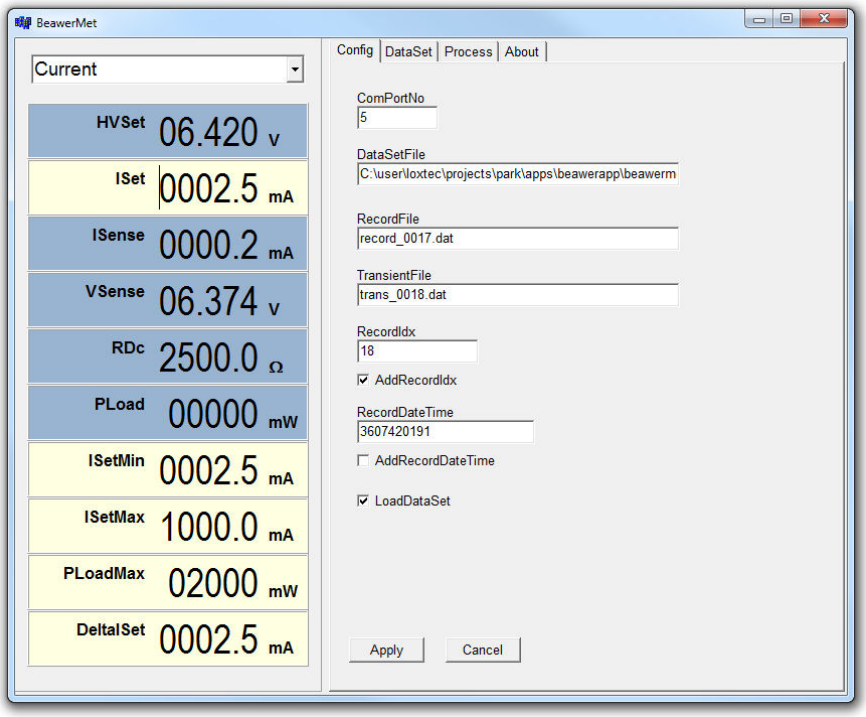


The items found in the configuration panel are:

***ComPortNo***

Use ComPortNo field to select virtual COM port allocated for the BEAWER device. After selecting the COM port number, press Apply button. If invalid COM port is selected (e.g. BEAWER is not connected to the PC), the field background becomes red.

***DataSetFile***

Location of data set file, which stores initial setting for all parameters. To change the data set file, use controls in DataSet tab.

***RecordFile***

Indication of last generated record file.

***TransientFile***

Indication of last generated transient file.

***RecordIdx***

Indication of index to last generated record or transient file.

***AddRecordIdx***

Check this field to enable incremented record index added to the file name for record or transient data.

***RecordDateTime***

Indication of datetime value for last generated record or transient file.

***AddRecordDateTime***

Check this field to enable datetime value added to the file name for record or transient data.

***LoadDataSet***

Check this field to enable initialization of all parameters with values stored in the data set file at application start-up.

# Data set panel

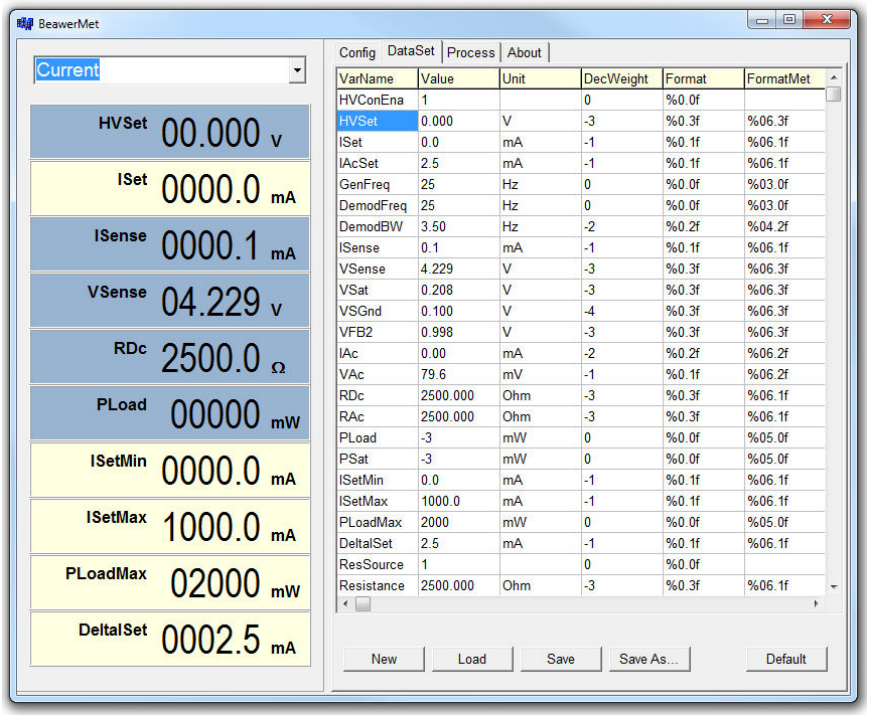


| VarName | Value | Unit | DecWeight | Format | FormatMet |
|---|---|---|---|---|---|
| HVConEna | 1 | | 0 | %0.0f | |
| HVSet | 0.000 | V | -3 | %0.3f | %06.3f |
| ISet | 0.0 | mA | -1 | %0.1f | %06.1f |
| IAcSet | 2.5 | mA | -1 | %0.1f | %06.1f |
| GenFreq | 25 | Hz | 0 | %0.0f | %03.0f |
| DemodFreq | 25 | Hz | 0 | %0.0f | %03.0f |
| DemodBW | 3.50 | Hz | -2 | %0.2f | %04.2f |
| ISense | 0.1 | mA | -1 | %0.1f | %06.1f |
| VSense | 4.229 | V | -3 | %0.3f | %06.3f |
| VSat | 0.208 | V | -3 | %0.3f | %06.3f |
| VSGnd | 0.100 | V | -4 | %0.3f | %06.3f |
| VFB2 | 0.998 | V | -3 | %0.3f | %06.3f |
| IAc | 0.00 | mA | -2 | %0.2f | %06.2f |
| VAc | 79.6 | mV | -1 | %0.1f | %06.2f |
| RDc | 2500.000 | Ohm | -3 | %0.3f | %06.1f |
| RAc | 2500.000 | Ohm | -3 | %0.3f | %06.1f |
| PLoad | -3 | mW | 0 | %0.0f | %05.0f |
| PSat | -3 | mW | 0 | %0.0f | %05.0f |
| ISetMin | 0.0 | mA | -1 | %0.1f | %06.1f |
| ISetMax | 1000.0 | mA | -1 | %0.1f | %06.1f |
| PLoadMax | 2000 | mW | 0 | %0.0f | %05.0f |
| DeltaISet | 2.5 | mA | -1 | %0.1f | %06.1f |
| ResSource | 1 | | 0 | %0.0f | |
| Resistance | 2500.000 | Ohm | -3 | %0.3f | %06.1f |

This panel reviews all system parameters and their attributes. Some of these parameters are inner variables of the BEWER device, which are directly communicated through the USB connection. These include set and sense values for heater current and voltage, as for measured heater resistance and power dissipation. Other parameters are BewerMet-related, only. The table involves parameter name, actual value, the parameter unit (dimension), its format and so on.

Parameter values, as well as other attributes, can be edited, though we do not recommend this; instead, we encourage users to use parameter selection panel for editing the values. Nevertheless, if desirable, the data set can be modified and then stored by clicking "Save" or "Save As..." buttons. The stored values will be loaded automatically at application start-up, if LoadDataSet if checked, or can be loaded manually clicking the "Load" button. Clicking "Default" button sets default values (you need also click "Save" to ensure the data set file has been set to defaults).

Below is listing of all parameters with short description. Column BEAWER indicates that parameter is communicated with the BEAWER device. Column Raw unit represents units in which integer values are communicated between host and the BEAWER device.

| Parameter | Unit | BEAWER | Raw unit | Selection panel | Comment |
|---|---|---|---|---|---|
| HVConEna | | YES | | General | if ON, HVSet control is automated |
| HVSet | V | YES | mV | General | wished DCDC voltage output |
| ISet | mA | YES | 0.1mA | Current | wished DC current value |
| IAcSet | mA | YES | 0.1mA | Modulation | wished AC current value |
| GenFreq | Hz | YES | Hz | Modulation | generator frequency |
| DemodFreq | Hz | YES | Hz | Modulation | demodulator frequency |
| DemodBW | Hz | YES | 0.01Hz | Modulation | demodulator bandwith |
| ISense | mA | YES | 0.1mA | Current | sensed heater DC current |
| VSense | V | YES | mV | Current | sensed heater DC voltage |
| VSat | V | YES | mV | General | current driver saturation voltage |
| VSGnd | V | YES | 0.1mV | General | signal ground voltage |
| VFB2 | V | YES | mV | General | DCDC regulator feedback voltage |
| IAc | mA | YES | 0.01mA | Modulation | sensed heater AC current |
| VAc | mV | YES | 0.1mV | Modulation | sensed heater AC voltage |
| RDc | Ω | YES | mΩ | Resistance | heater DC resistance |
| RAc | Ω | YES | mΩ | Resistance | heater AC resistance |
| PLoad | mW | YES | mW | Power | heater power dissipation |
| PSat | mW | YES | mW | Power | current driver power dissipation |
| ISetMin | mA | NO | | Current | minimum driver current |
| ISetMax | mA | NO | | Current | maximum driver current |
| PLoadMax | mW | NO | | Power | max heater power dissipation |
| DeltaISet | mA | NO | | Current | current step in CV or transients |
| ResSource | | NO | | Resistance | DC/AC resistance selection |
| RAmb | Ω | NO | | Resistance | inactive heater resistance |
| Alpha | 1/kK | NO | | Temperature | temperature coef of resistance |
| TempAmb | °C | NO | | Temperature | ambient temperature |
| TempEst | °C | NO | | Temperature | actual heater temperature |
| Settling | s | NO | | Transients | process settling time |
| Time | s | YES | ms | Transients | transient time |
| Points | | NO | | Transients | number of process data points |
| Progress | % | NO | | Transients | progress in process |

# Parameter selection panel

User can focus a small part of data set by selecting data set group in the selection panel at left side of the BeawerMet GUI. User-controllable parameter values are shown in light yellow background. To edit a parameter, click on the parameter field, write down the numeric value and press ENTER. Discrete parameters can be changed by a double-click, with mouse pointer over the parameter text value. Read-only values are shown with bluish background.

Selection groups are designed to approximate a functional layer at which device is operated, from low-level hardware-related device testing to high-level processes of heater characterization.

The General group includes basic hardware-related parameters like wished DC-DC voltage output, the selection of its automated control, whished current driver value and several measured DC values relevant to the BEAWER operation.

In Current group, wished DC current value can be set together with its minimum and maximum limits and value of current step, relevant in the C-V characterization and transient processes. Several measured DC values including actual heater current, voltage and resulting DC resistance, are shown.

The Modulation group offers control over AC (harmonic) generator and subsequent synchronous demodulator frequency and bandwidth. The bandwidth is also relevant for settlement times of DC values: for higher bandwidth, the settlement time is shorter, and vice versa. Then wished value of AC current, and sensed values for AC current and voltage are shown, as well as for evaluated AC resistance.

In Resistance group, DC and AC measured resistances are available with a selector for one of them, which is then stored in the final Resistance parameter. Ambient resistance value relevant to heater temperature estimation is also shown.

Power group involves available heater power and current driver power dissipations, as well as maximum heater power output value relevant for characterization processes.

Temperature group offers control over ambient resistance and temperature values and temperature coefficient of resistance (Alpha), which for platinum heaters should be close to 3.93 $kK^{-1}$. Resulting estimated heater temperature is also part of the group.

In Transients group, settling time for ambient and current settling process is available, together with indication of process progress and transient measurement time.

# Process panel

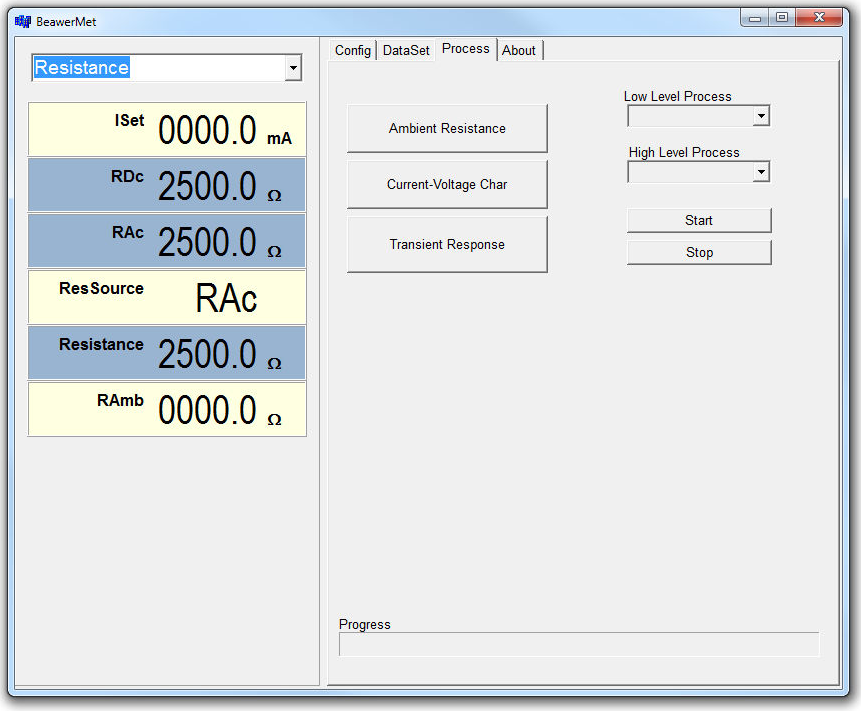


Process panel offers selection of low- and high-level processes which can be started or stopped by clicking at the particular button. Three high-level processes are currently available: Ambient resistance, Current-Voltage characteristics and Transient response measurement. To start each of these processes, simple click on the associated button.

### *Ambient resistance*

In this process, DC and AC current values are set to their minimal values derived from the ISetMin parameter. Then, process waits for settling time (parameter Settling). After that, process picks the Resistance value and loads RAmb with it, which is then considered as inactive (ambient) resistance of the heater.

Invoke this process before any measurement involving heater temperature readout.

### *Current-Voltage characteristics*

First, the process resets DC and AC current values to their minimum. Then, in a loop limited only by time duration of 1000 seconds and reaching of maximum in current and power values, DC current is incremented by DeltaISet steps, settled, and whole data set is stored. After reaching any of current or power limit, or running out of available process time, the DC current value is again reset and the recorded data set values are stored in a text record file.

### *Transient response*

After initial settlement time, the process increases DC heater current by DeltaISet value, and immediately after that, invokes special BEAWER command to obtain key measurement data in regular 100ms intervals. The data are stored for 10 seconds and subsequently written into transient response file.

# Addenda

Addendum 1: Signal core

Addendum 2: Schematic diagram

# Signal Core

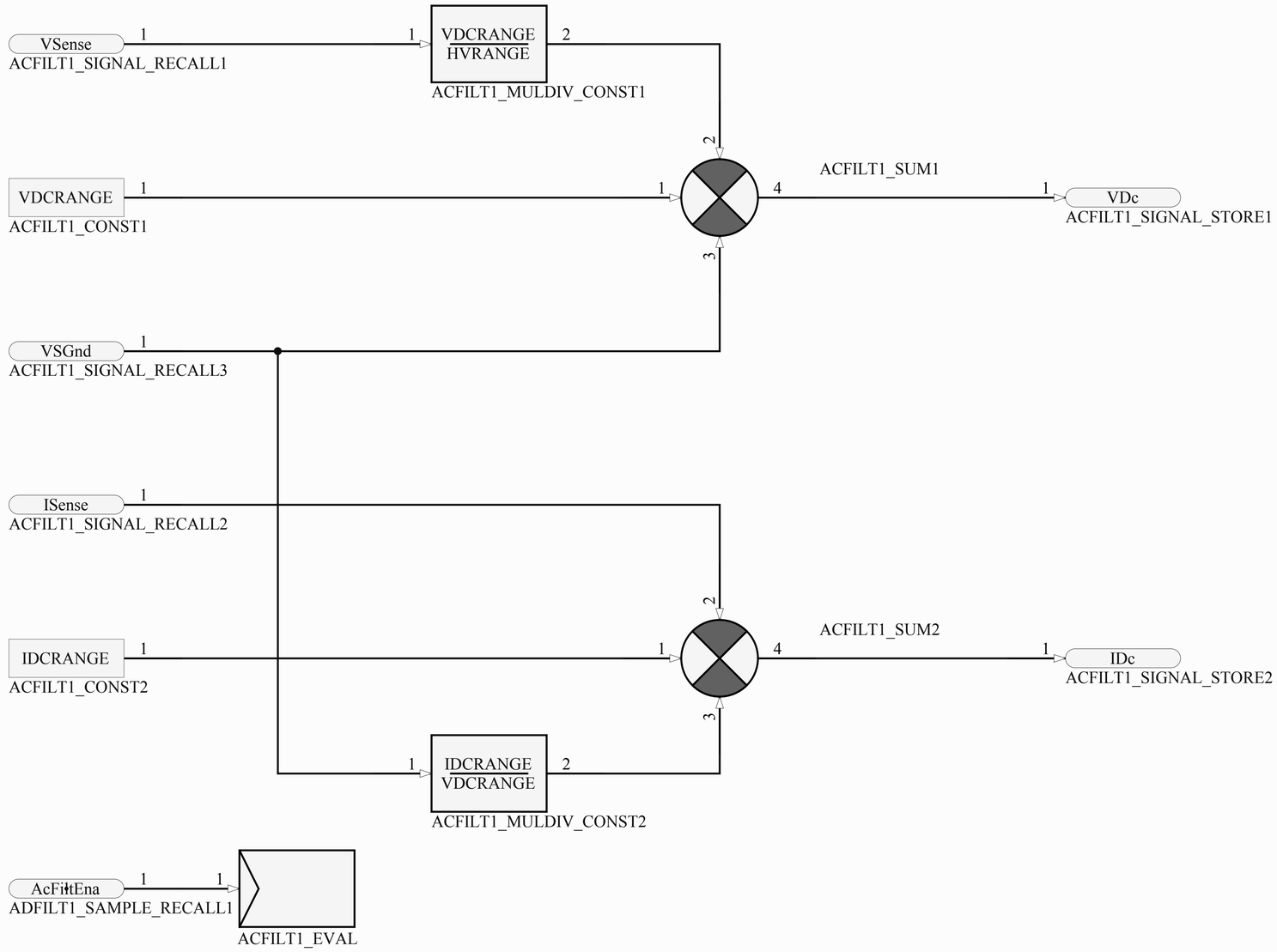


| | | |
|---|---|---|
| Title | AcFilter | |
| Size A4 | Number | Revision |
| Date: 25. 2. 2014 | | Sheet of |
| File: C:\user\..\acfilt.SchDoc | | Drawn By: |

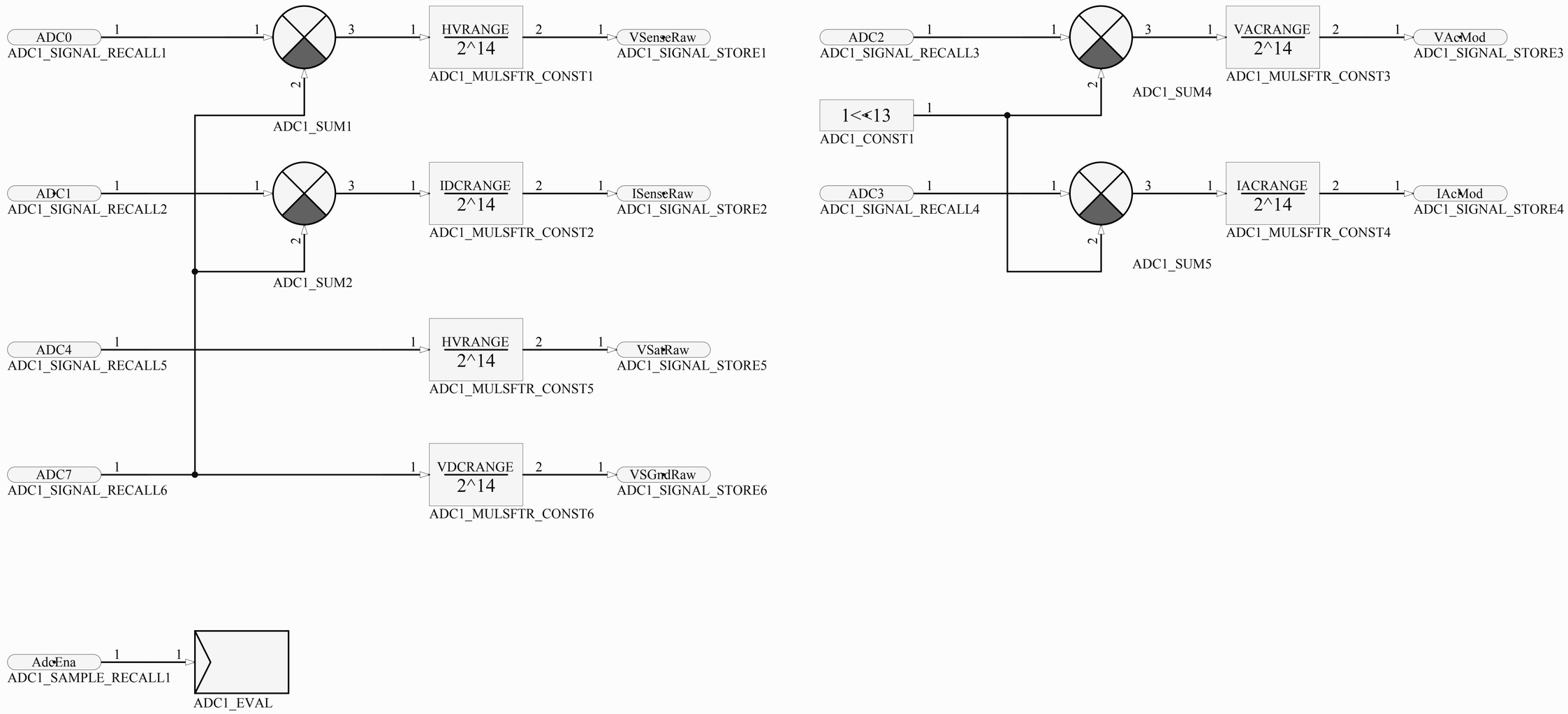


| | | |
|---|---|---|
| Title | ADC | |
| Size A4 | Number | Revision |
| Date: 25. 2. 2014 | | Sheet of |
| File: C:\user\..\adc.SchDoc | | Drawn By: |

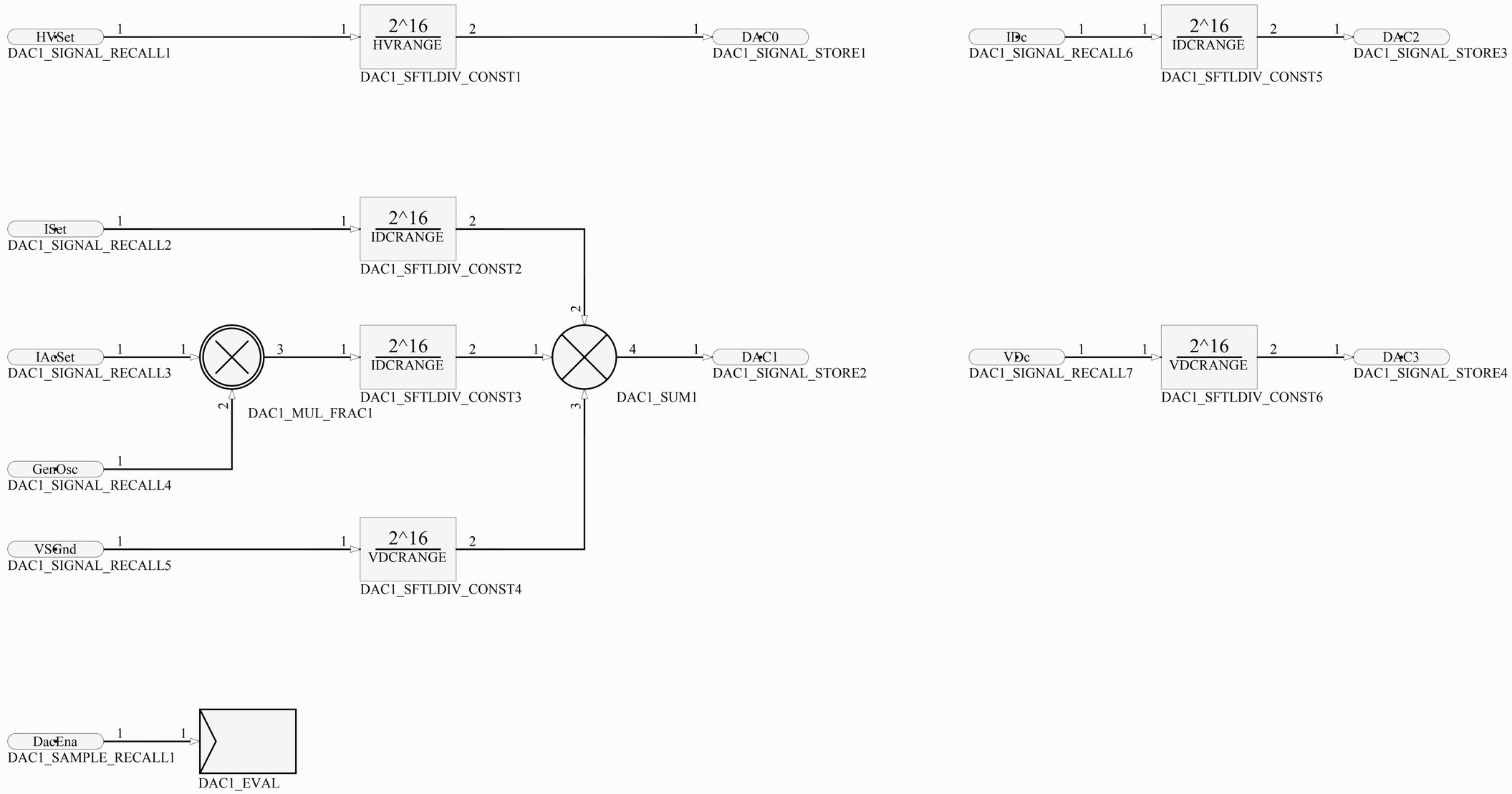


| | | |
|---|---|---|
| Title | DAC | |
| Size A4 | Number | Revision |
| Date: | 25. 2. 2014 | Sheet of |
| File: | C:\user\..\dac.SchDoc | Drawn By: |

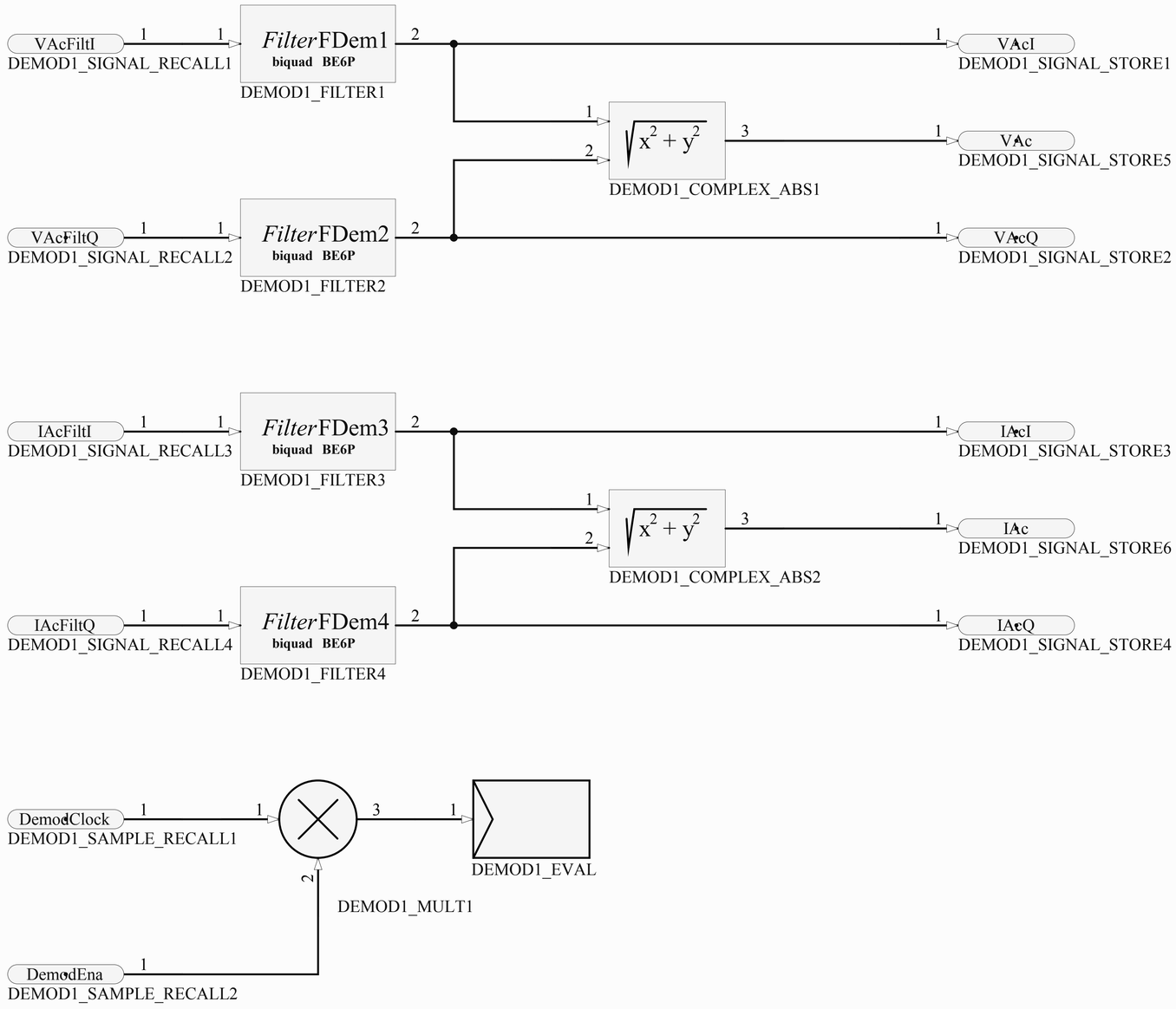


| | | |
|---|---|---|
| Title | Demodulator | |
| Size A4 | Number | Revision |
| Date: 25. 2. 2014 | | Sheet of |
| File: C:\user\..\demod.SchDoc | | Drawn By: |

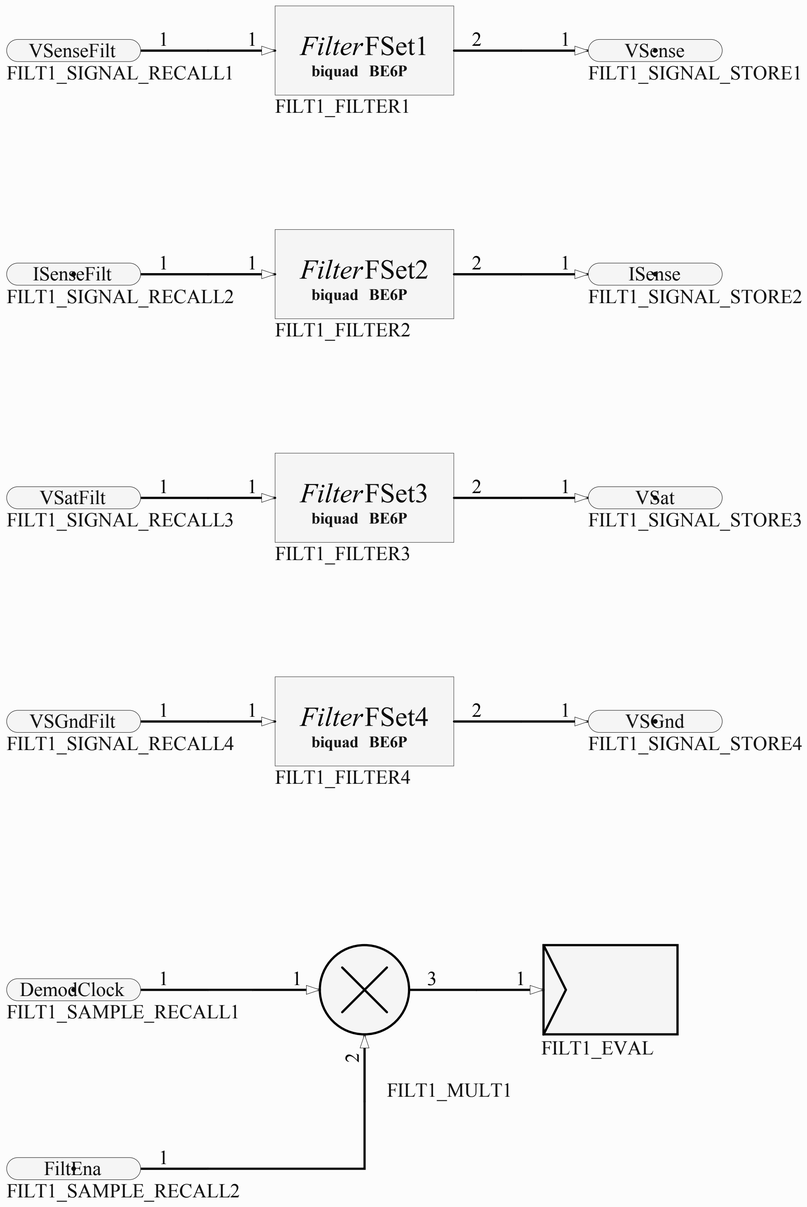


| | | |
|---|---|---|
| Title | Filter | |
| Size A4 | Number | Revision |
| Date: 25. 2. 2014 | | Sheet of |
| File: C:\user\..\filter.SchDoc | | Drawn By: |

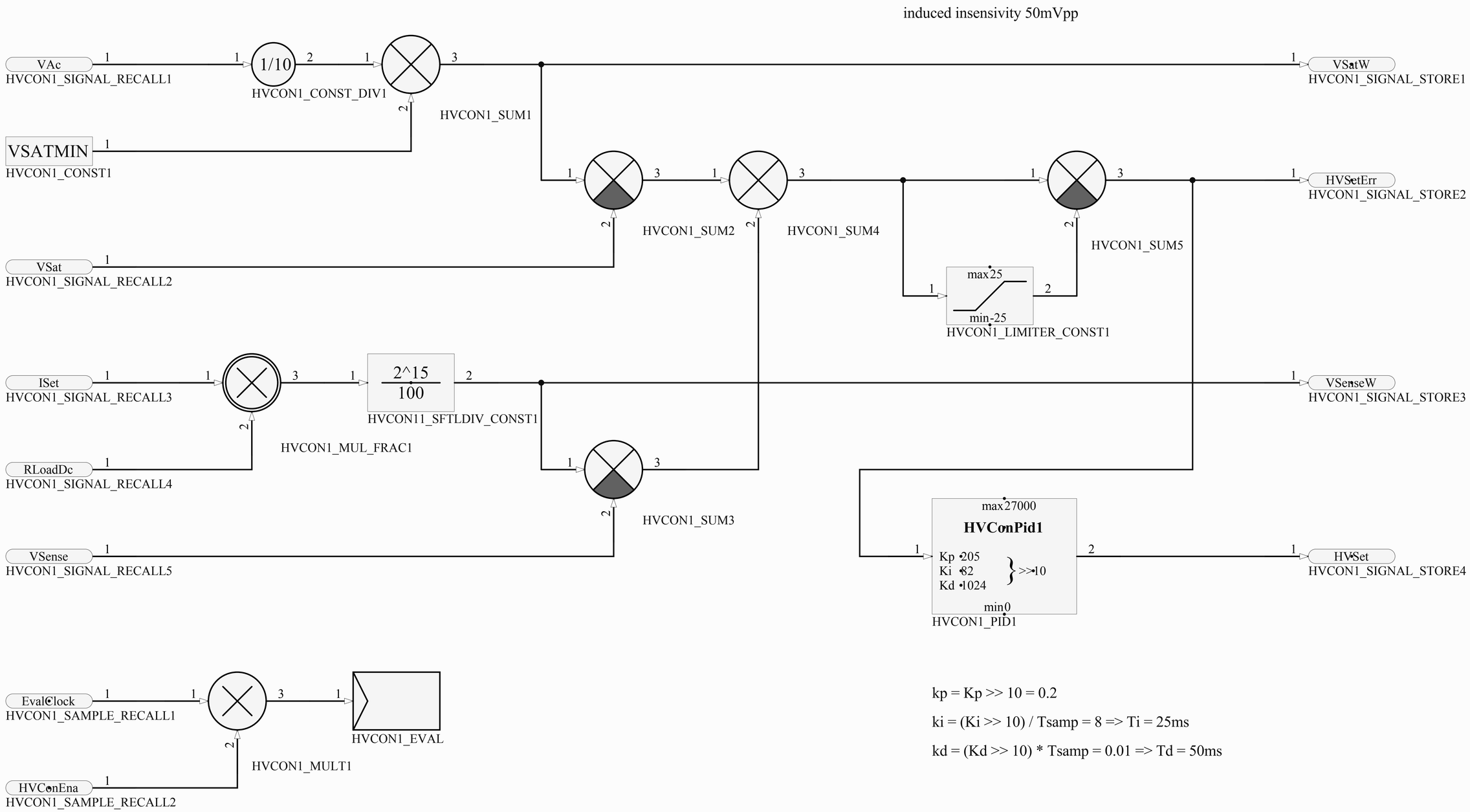


kp = Kp >> 10 = 0.2

ki = (Ki >> 10) / Tsamp = 8 => Ti = 25ms

kd = (Kd >> 10) * Tsamp = 0.01 => Td = 50ms

| | | |
|---|---|---|
| Title | HVCon | |
| Size A4 | Number | Revision |
| Date: 25. 2. 2014 | | Sheet of |
| File: C:\user\..\hvcon.SchDoc | | Drawn By: |

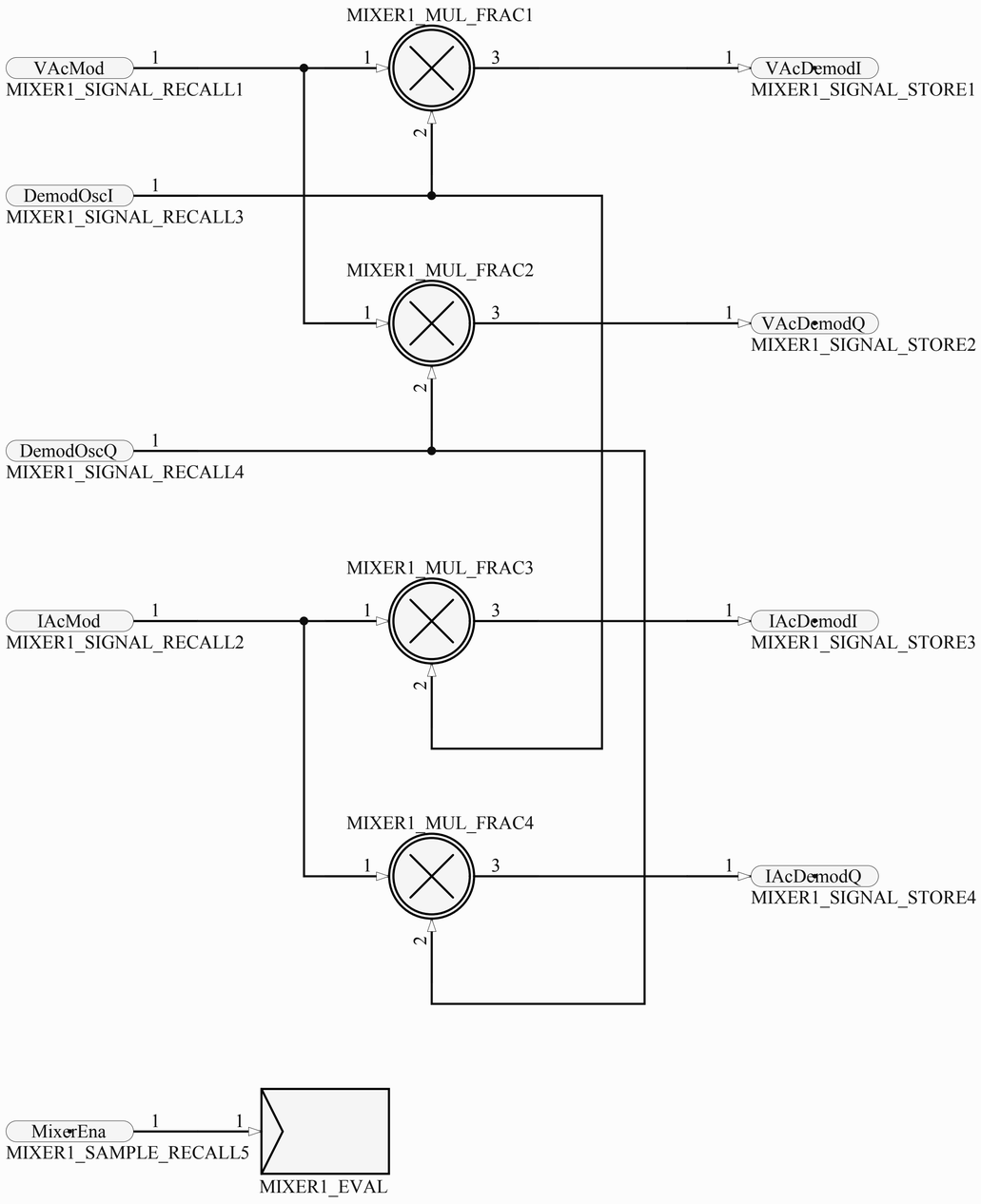


| | | |
|---|---|---|
| Title | Mixer | |
| Size A4 | Number | Revision |
| Date: 25. 2. 2014 | | Sheet of |
| File: C:\user\..\mixer.SchDoc | | Drawn By: |

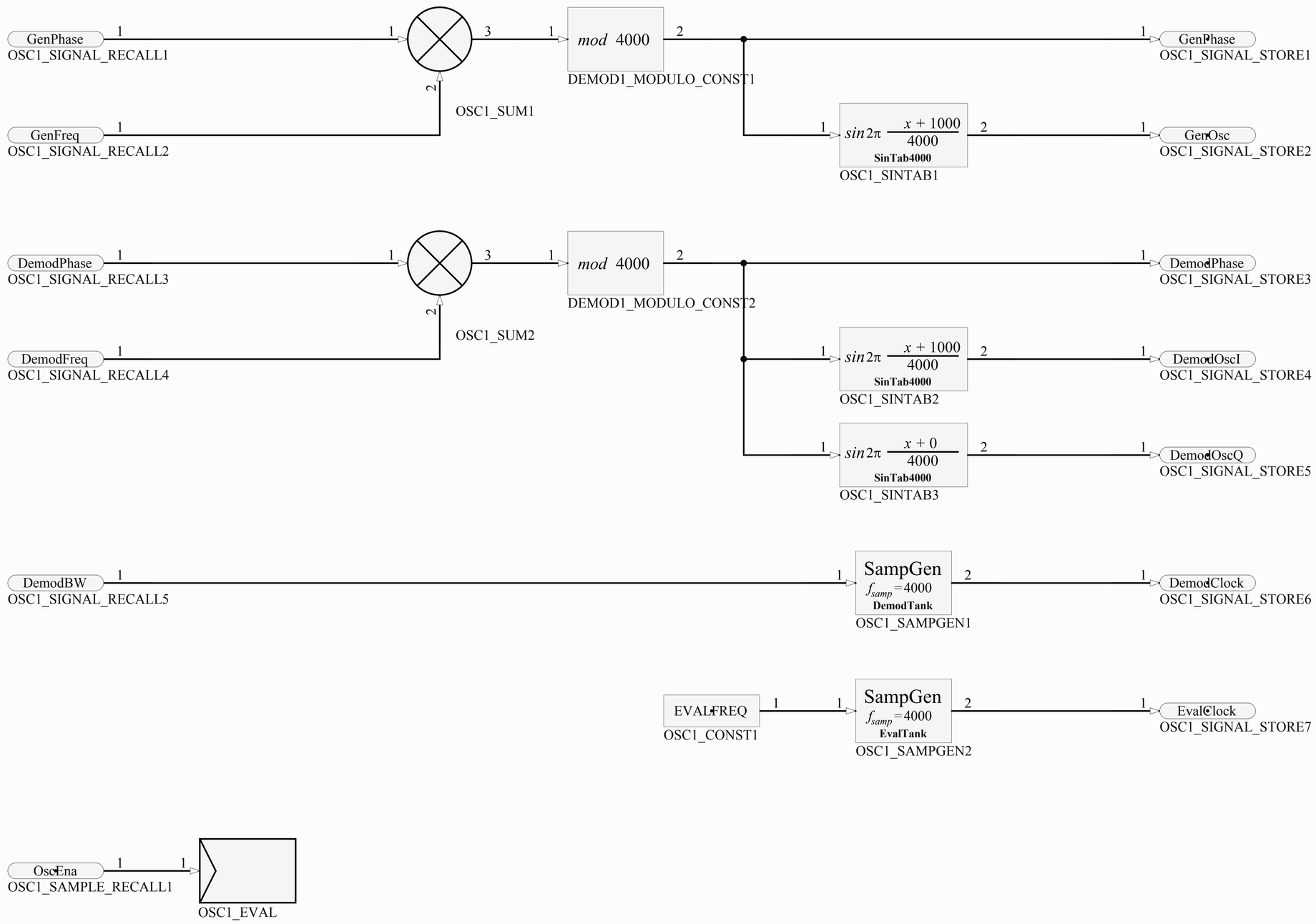


| | | |
|---|---|---|
| Title | Oscillator | |
| Size A4 | Number | Revision |
| Date: | 25. 2. 2014 | Sheet of |
| File: | C:\user\..\oscillator.SchDoc | Drawn By: |

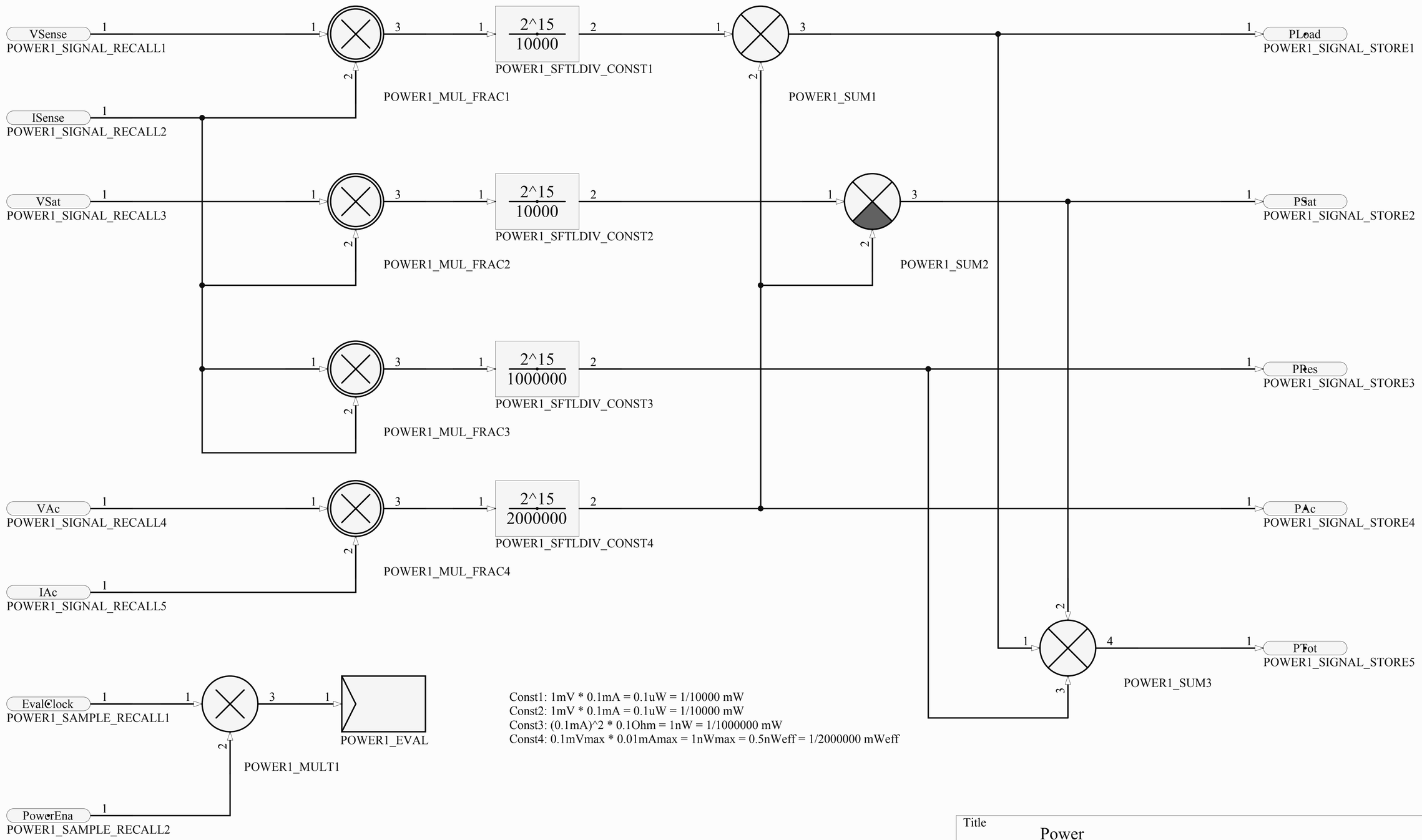


Const1: 1mV * 0.1mA = 0.1uW = 1/10000 mW
Const2: 1mV * 0.1mA = 0.1uW = 1/10000 mW
Const3: (0.1mA)^2 * 0.1Ohm = 1nW = 1/1000000 mW
Const4: 0.1mVmax * 0.01mAmax = 1nWmax = 0.5nWeff = 1/2000000 mWeff

| | | |
|---|---|---|
| Title | Power | |
| Size A4 | Number | Revision |
| Date: 25. 2. 2014 | | Sheet of |
| File: C:\user\..\power.SchDoc | | Drawn By: |

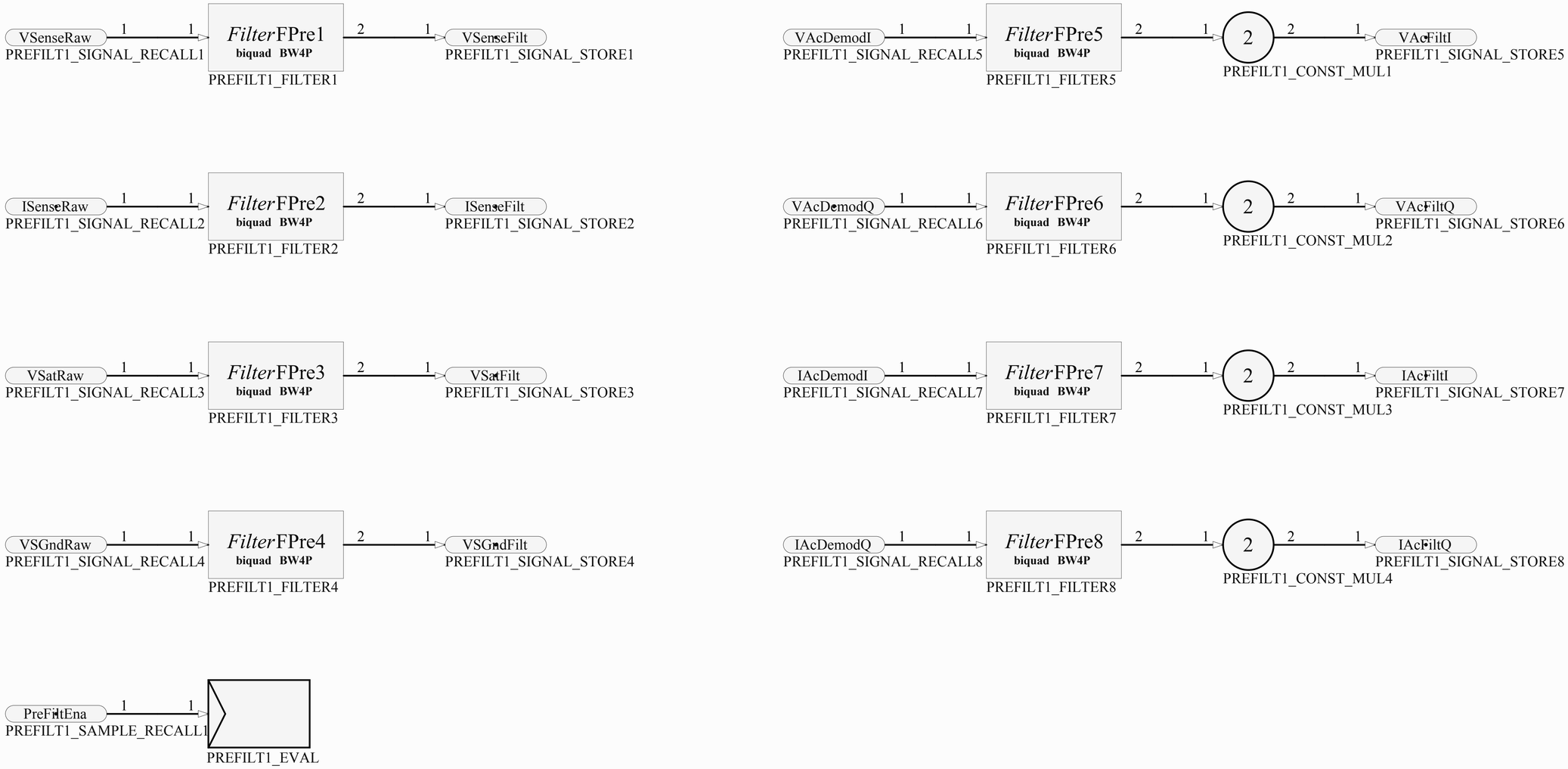


| | | |
|---|---|---|
| Title | Filter | |
| Size A4 | Number | Revision |
| Date: | 25. 2. 2014 | Sheet of |
| File: | C:\user\..\prefilt.SchDoc | Drawn By: |

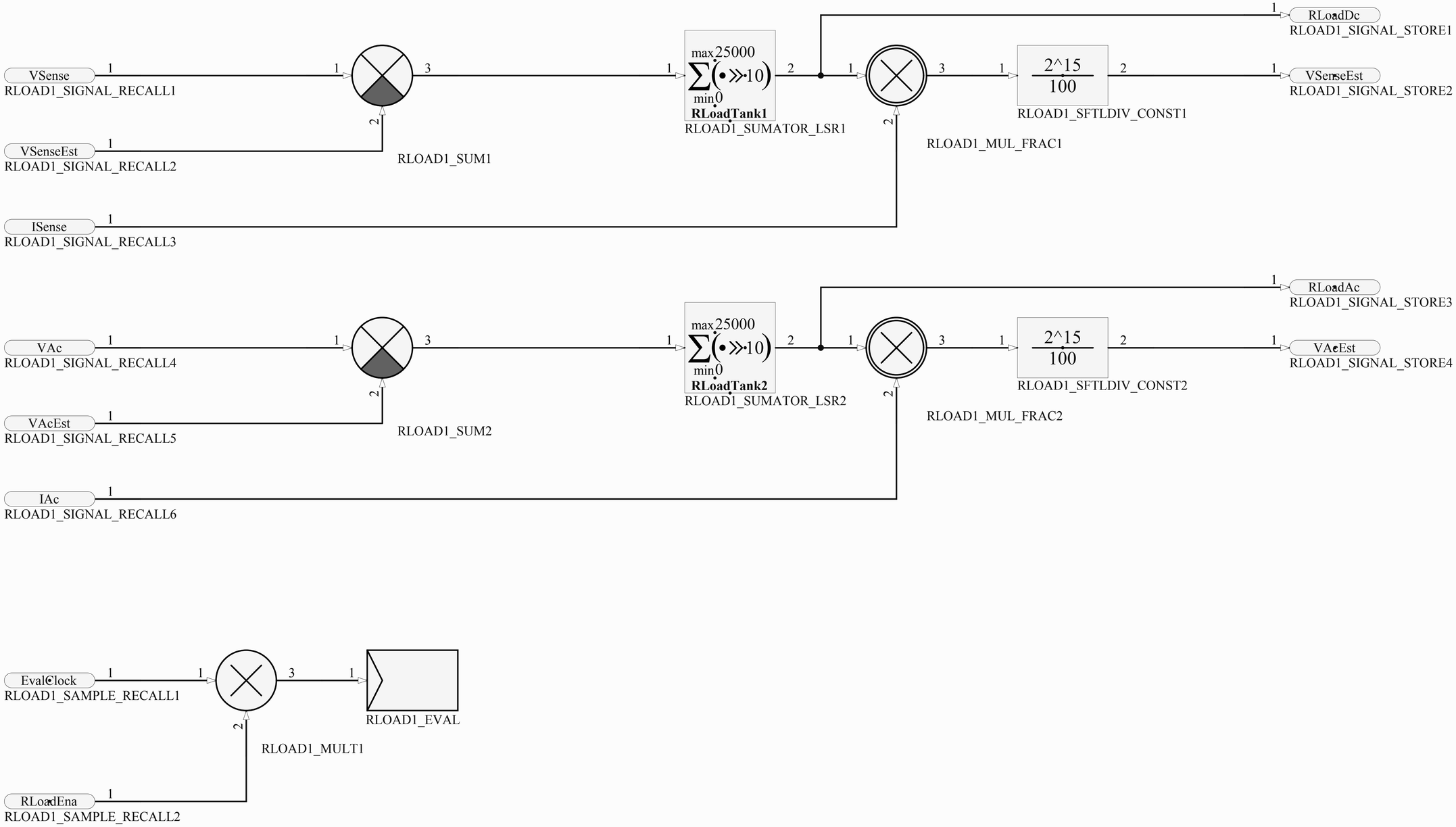





| | | |
|---|---|---|
| Title | RLoad | |
| Size A4 | Number | Revision |
| Date: | 25. 2. 2014 | Sheet of |
| File: | C:\user\..\rload.SchDoc | Drawn By: |

# Schematic Diagram

Voltage gain: 1/11V/V * 22 = 2V/V => AC voltage range is 2.5/2 = 1.25V or +/- 625mV

Current gain: 2V/A * 10 = 20V/A => AC current range is 2.5/20 = 125mA or +/- 62.5mA

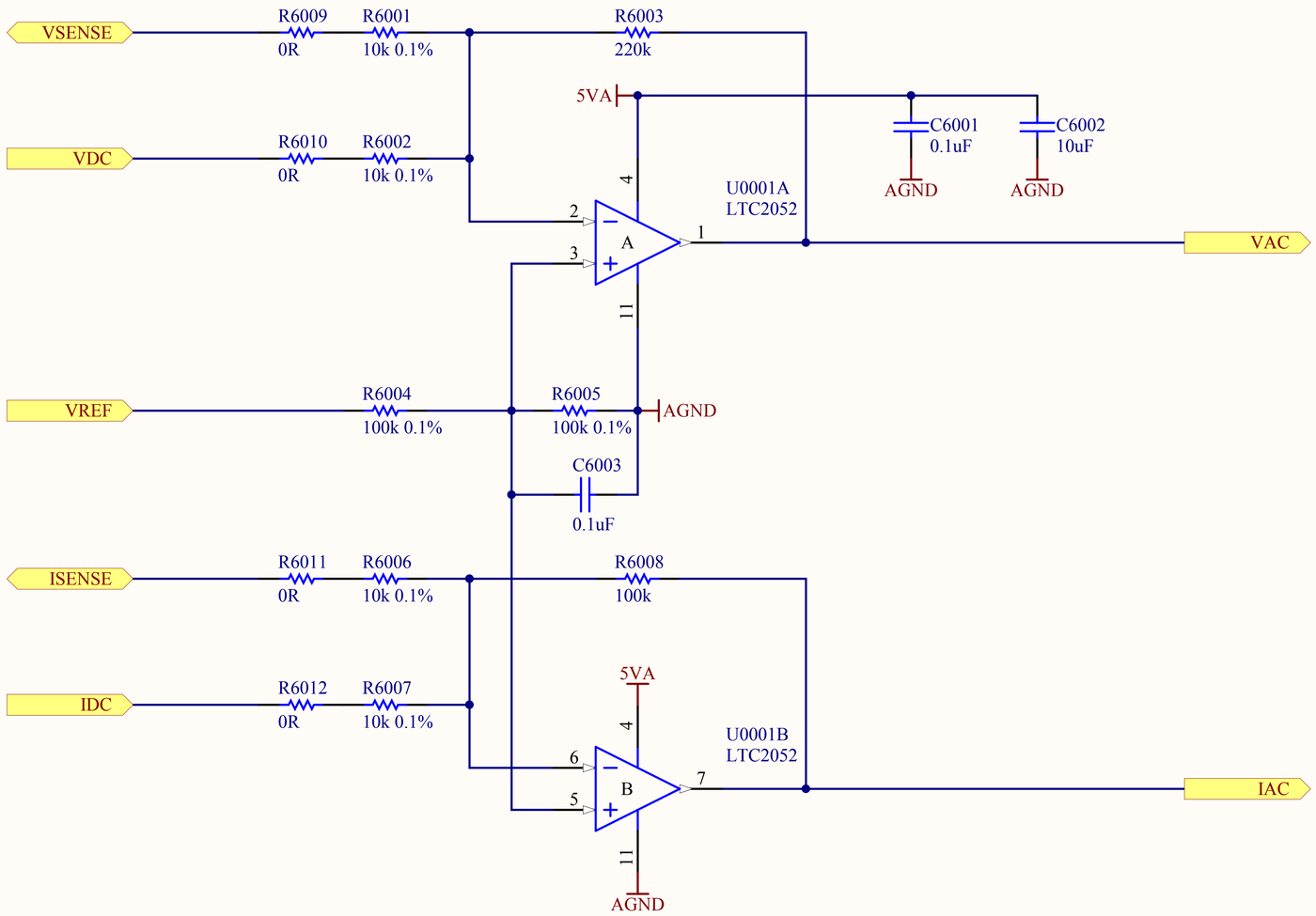


| | | |
|---|---|---|
| Title | AC Amplifier | |
| Size A4 | Number | Revision |
| Date: 25. 4. 2014 | | Sheet of |
| File: C:\user\..\beawer_acamp.SchDoc | | Drawn By: |

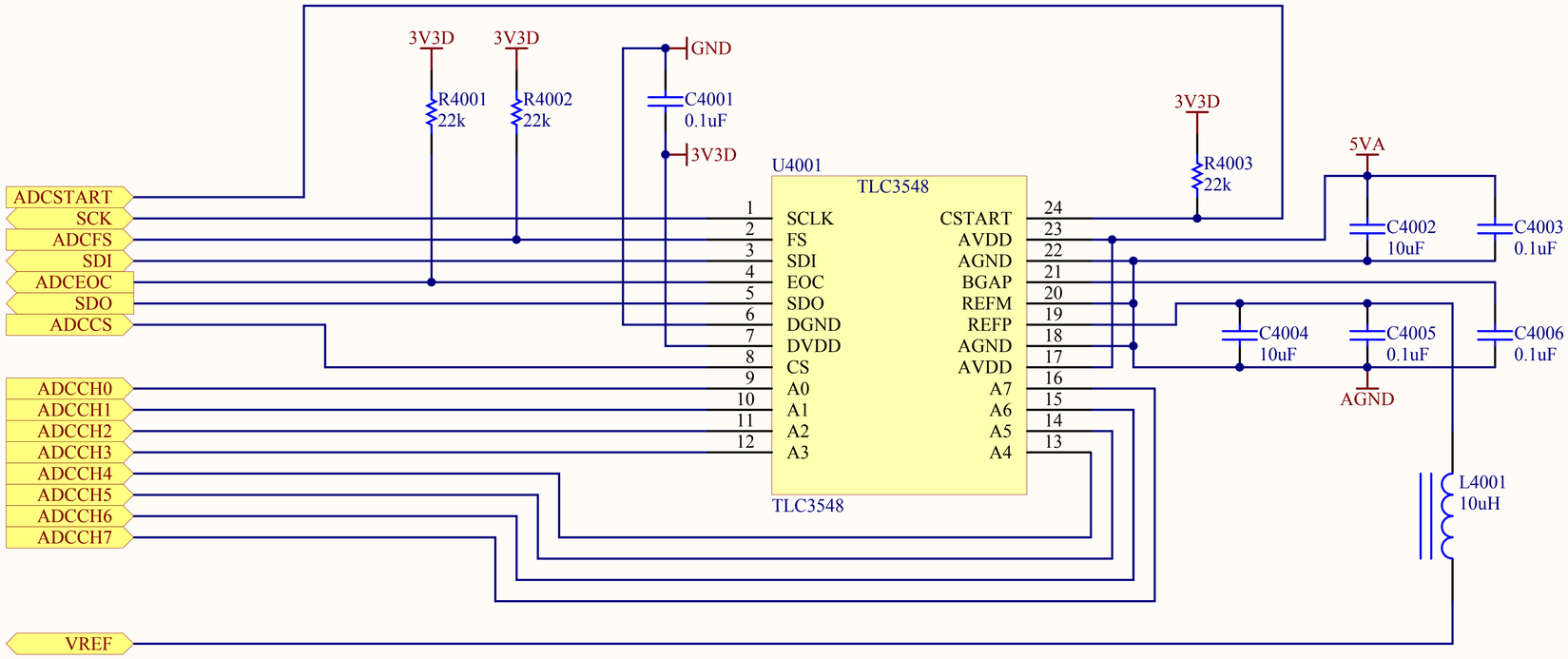


| | | |
|---|---|---|
| Title | ADC | |
| Size A4 | Number | Revision |
| Date: | 25. 4. 2014 | Sheet of |
| File: | C:\user\..\beawer_adc.SchDoc | Drawn By: |

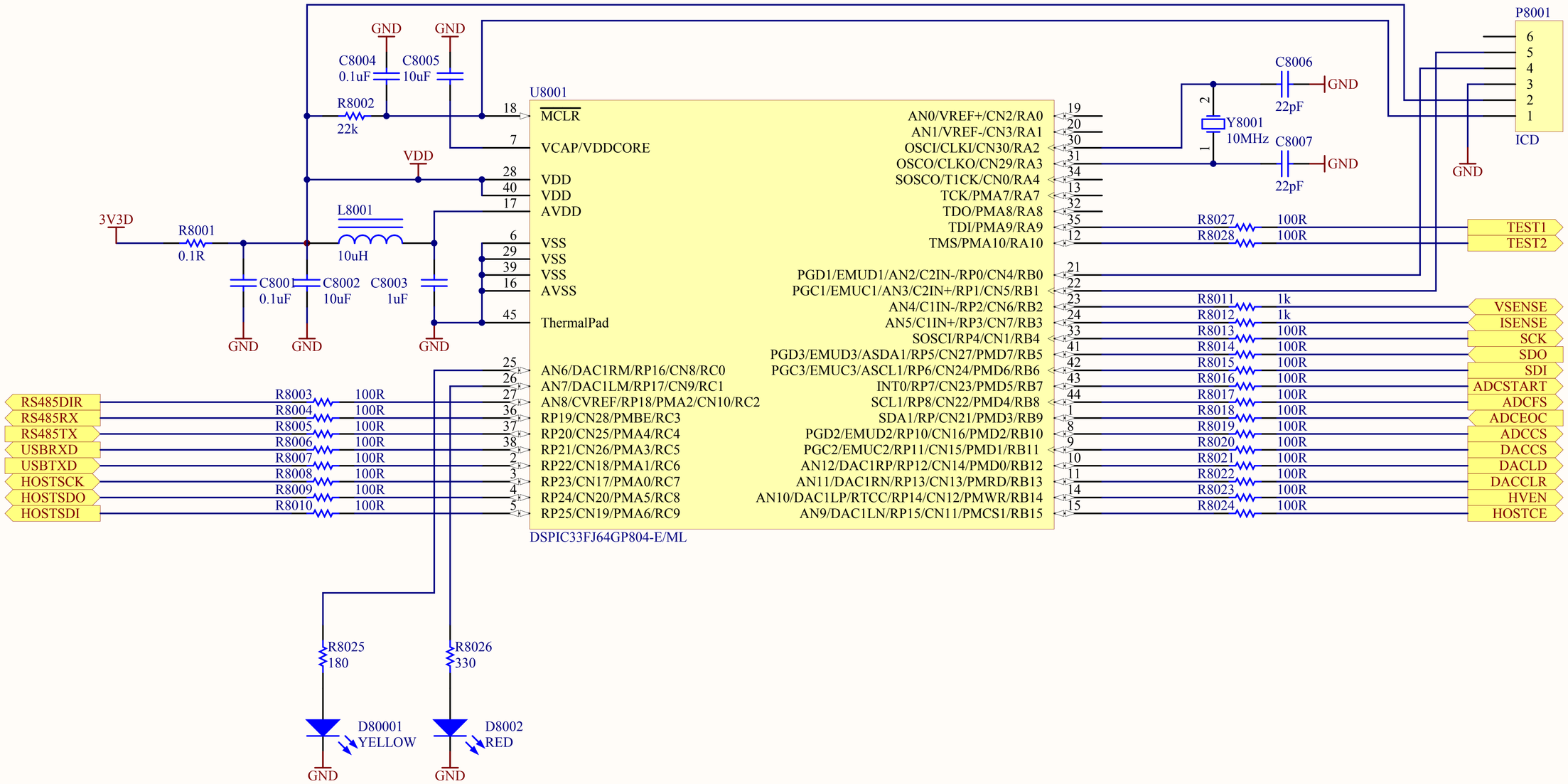


| | | |
|---|---|---|
| Title | CPU | |
| Size A4 | Number | Revision |
| Date: | 25. 4. 2014 | Sheet of |
| File: | C:\user\..\beawer_cpu804.SchDoc | Drawn By: |

Dumping for LC filter: beta = Rser / 2 * sqrt(C / L) = (60m + 2 * 22m) / 2 * sqrt (20u / 0.47u) = 0.34

Voltage Sense: 1/11 V/V = 90.91mV/V

Current sense: 2V/A

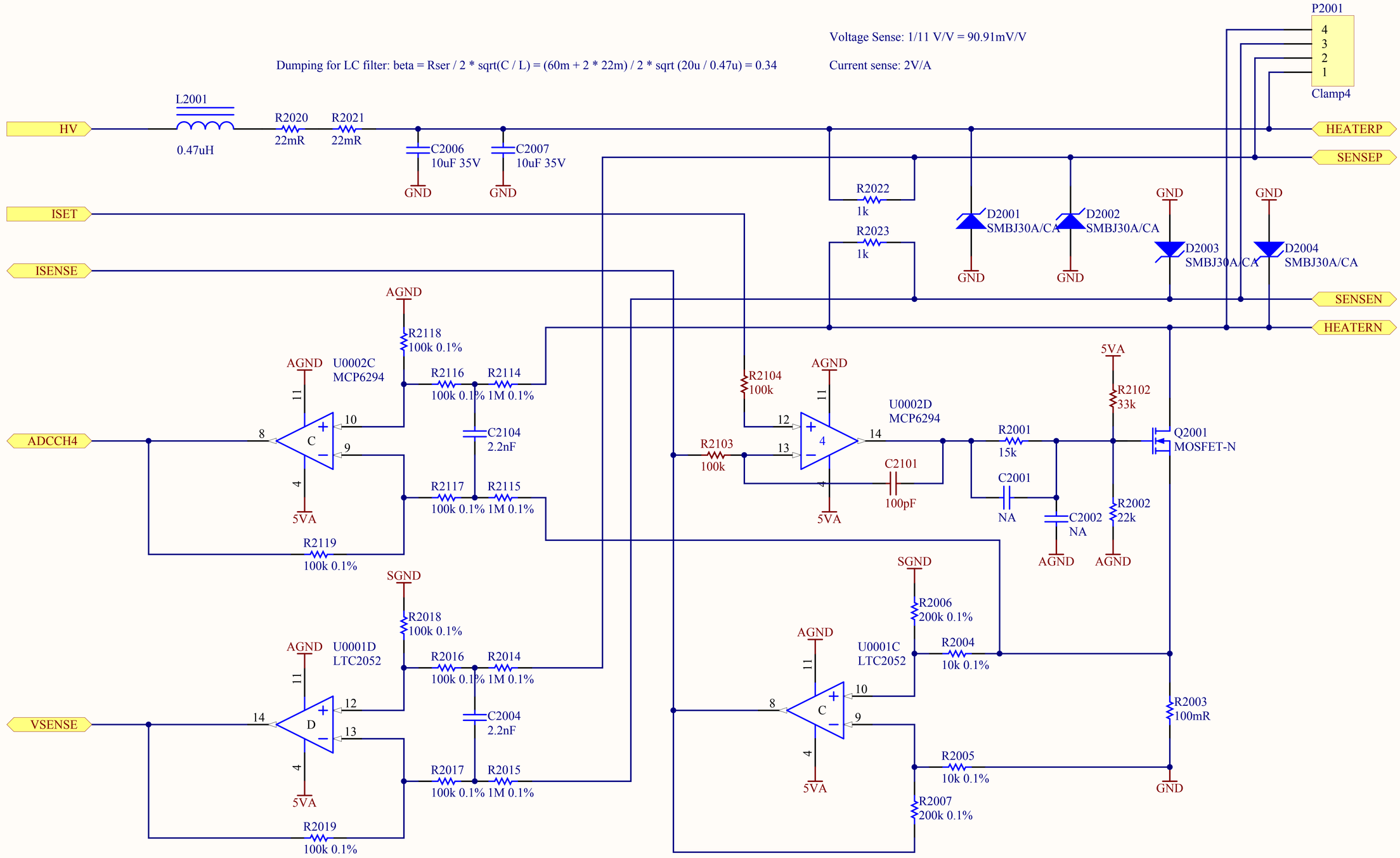


| Title | Current Source | |
|---|---|---|
| Size A4 | Number | Revision |
| Date: 25. 4. 2014 | | Sheet of |
| File: C:\user\..\beawer_csource.SchDoc | | Drawn By: |

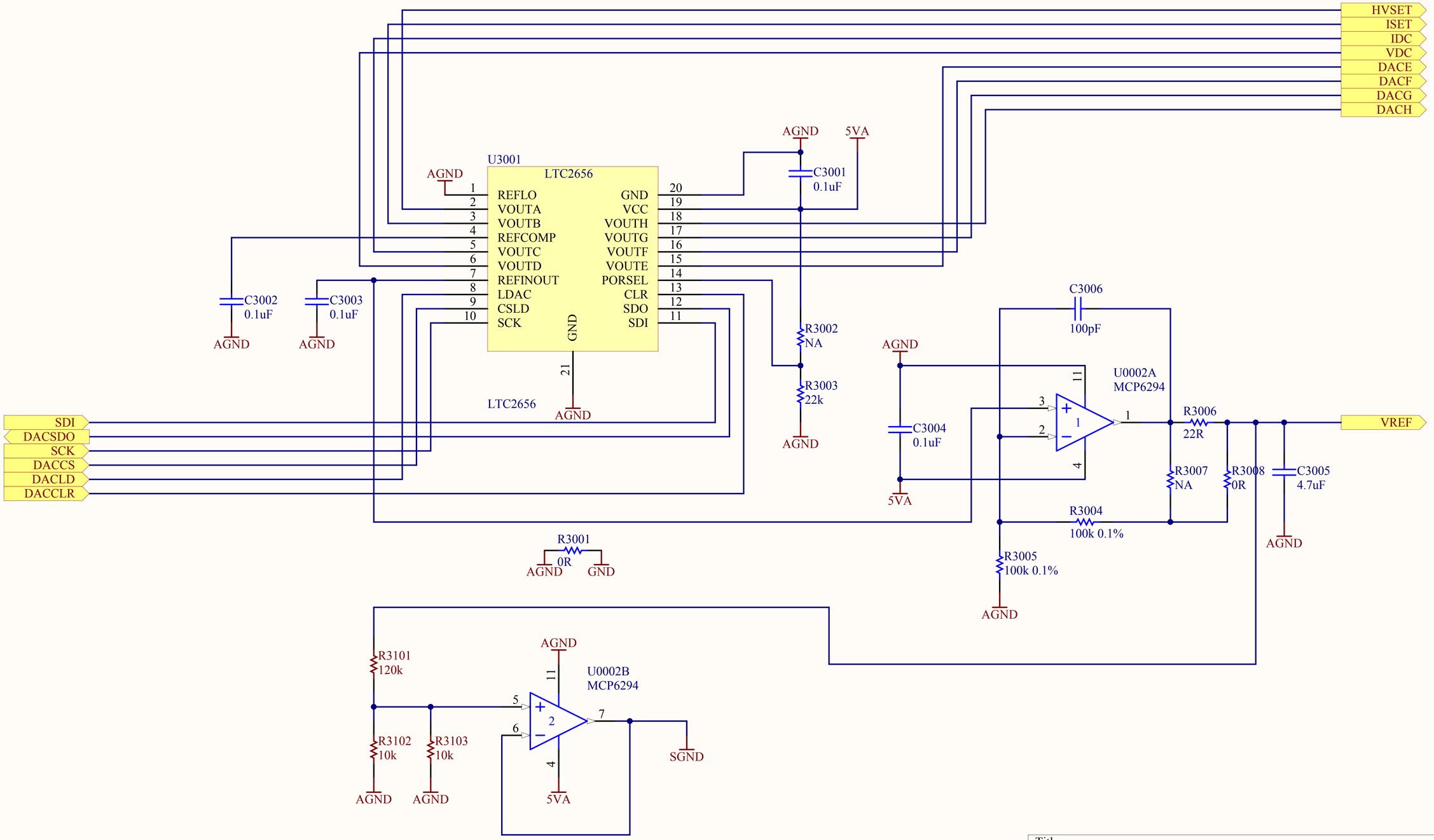


| Title | DAC | |
|---|---|---|
| Size A4 | Number | Revision |
| Date: 25. 4. 2014 | | Sheet of |
| File: C:\user\..\beawer_dac.SchDoc | | Drawn By: |

Butterworth 3P LP Fc=400Hz (beta=0.506)

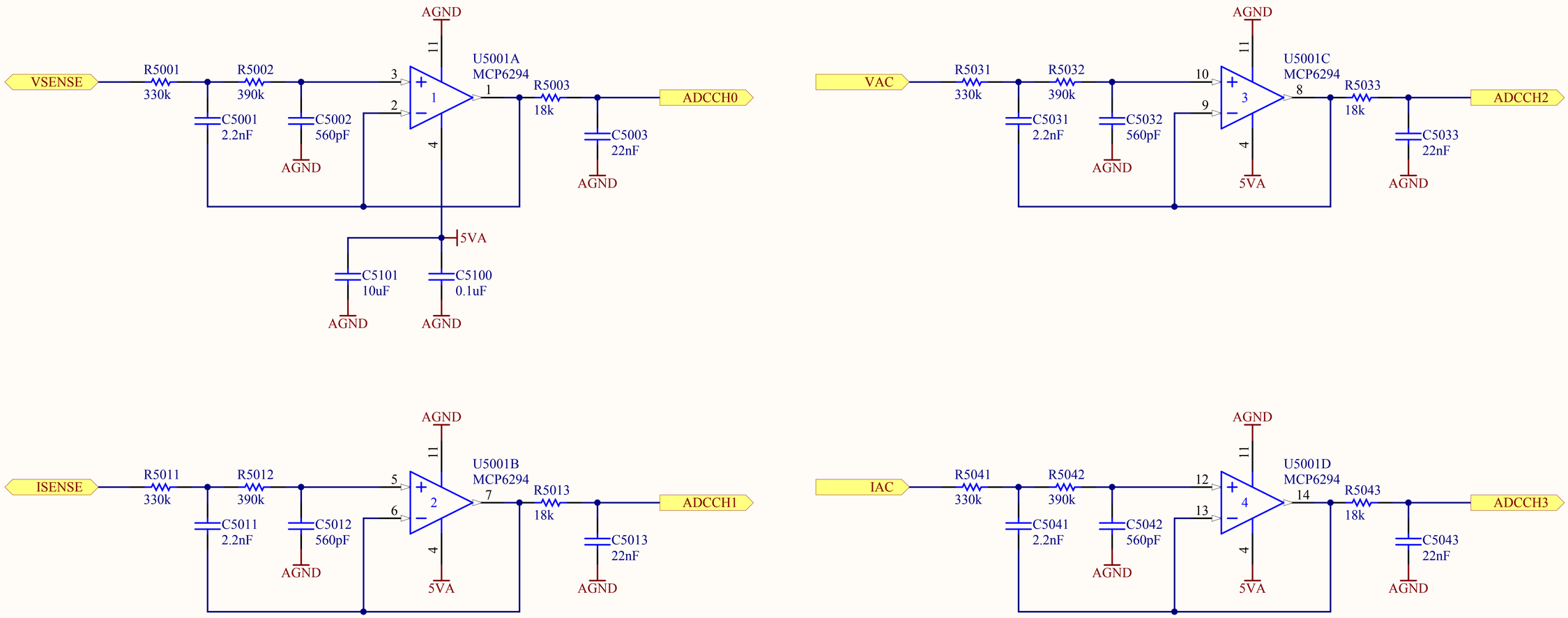


| | | |
|---|---|---|
| Title | Filter | |
| Size A4 | Number | Revision |
| Date: 25. 4. 2014 | | Sheet of |
| File: C:\user\..\beawer_filt.SchDoc | | Drawn By: |

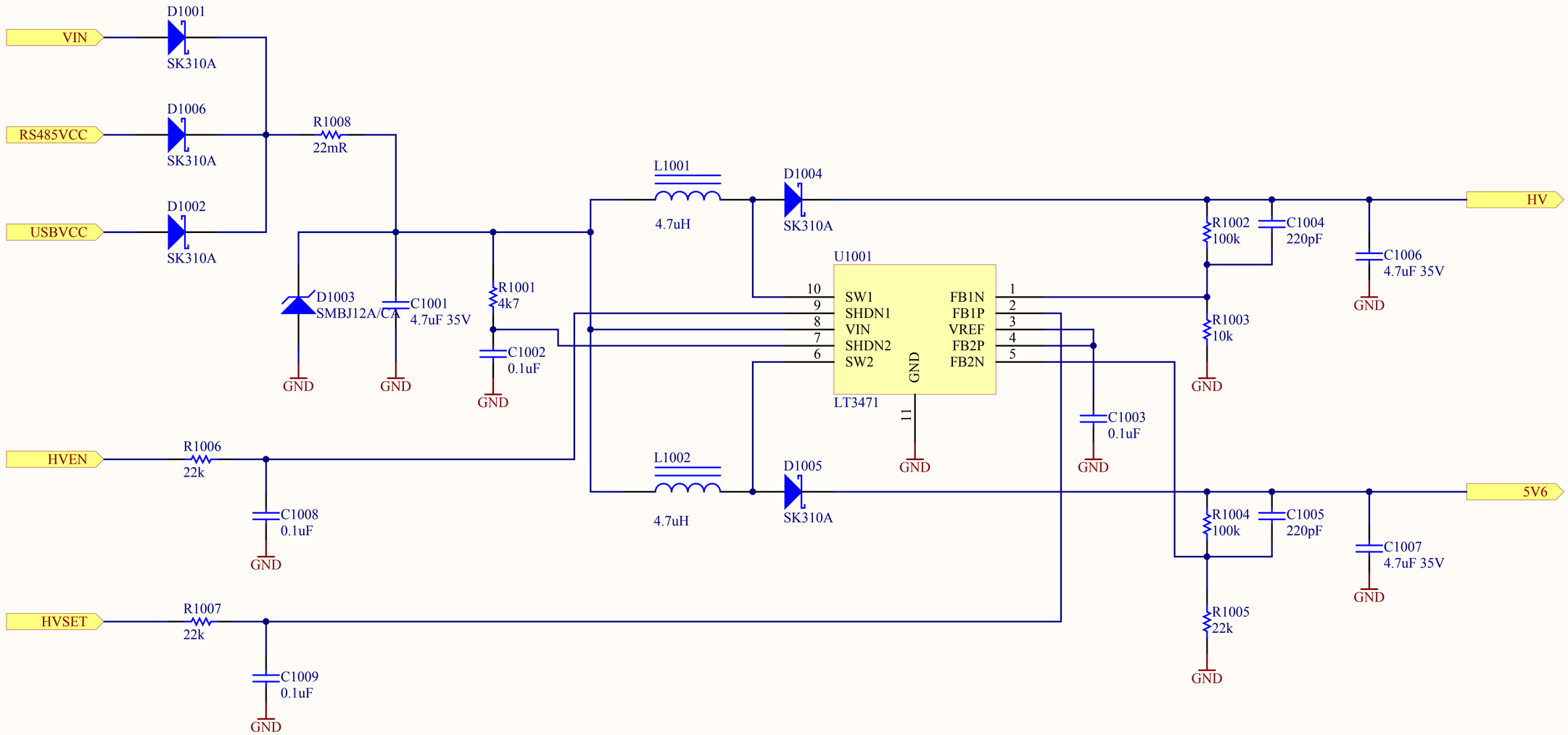


| | | |
|---|---|---|
| Title | DC-DC Converter | |
| Size A4 | Number | Revision |
| Date: 25. 4. 2014 | | Sheet of |
| File: C:\user\..\beawer_hv.SchDoc | | Drawn By: |

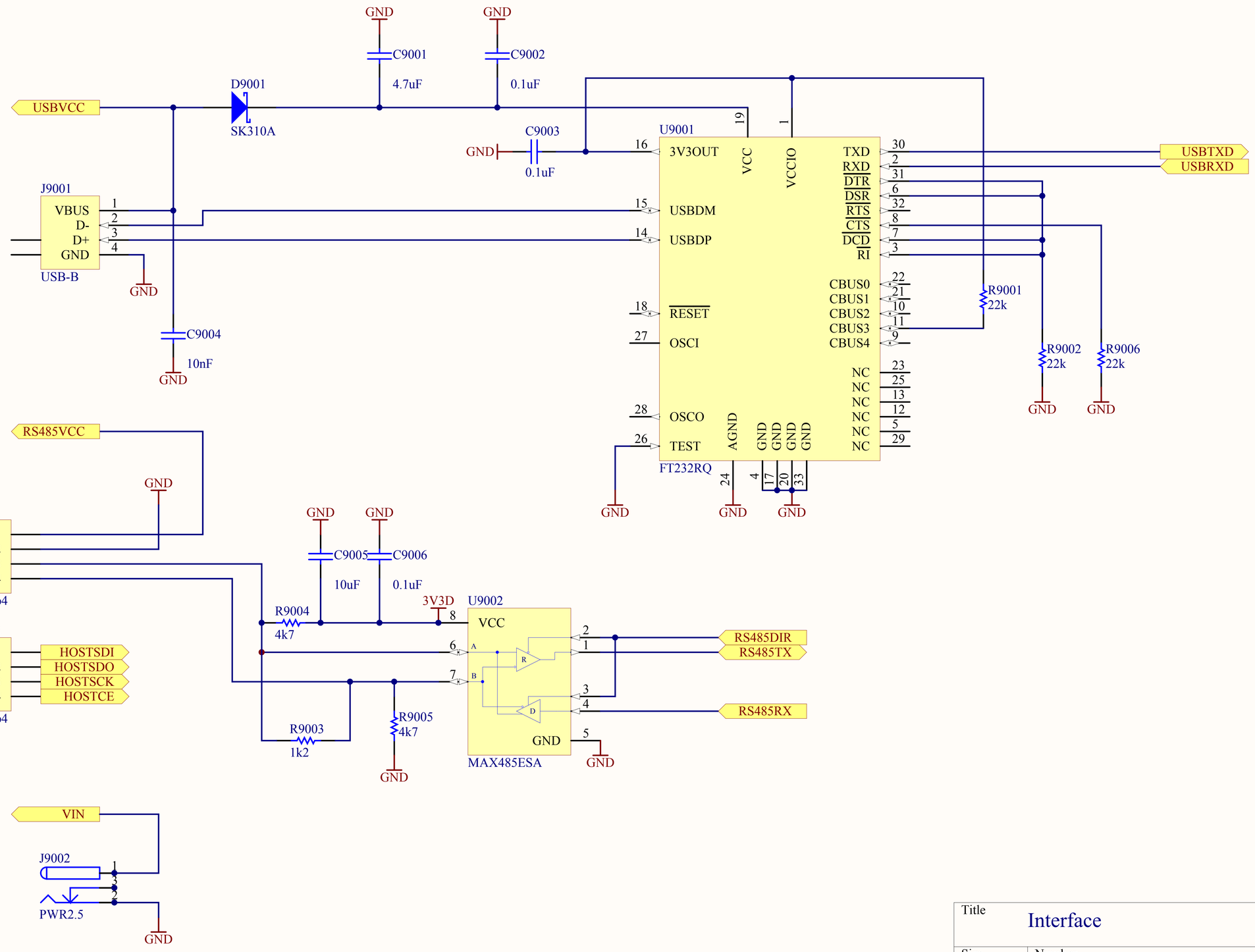


| | | |
|---|---|---|
| Title | Interface | |
| Size A4 | Number | Revision |
| Date: | 25. 4. 2014 | Sheet of |
| File: | C:\user\..\beawer_interface.SchDoc | Drawn By: |

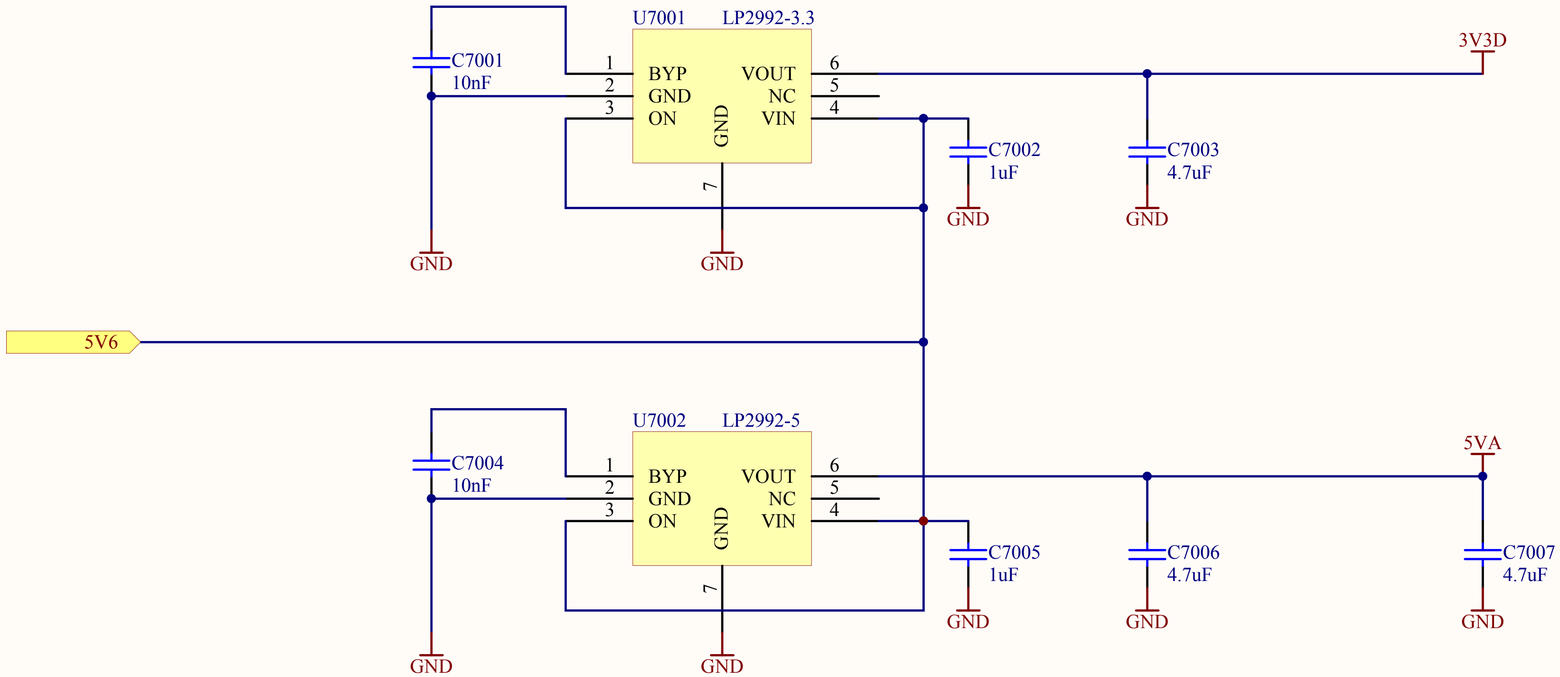


| | | |
|---|---|---|
| Title | LDO | |
| Size A4 | Number | Revision |
| Date: 25. 4. 2014 | | Sheet of |
| File: C:\user\..\beawer_ldo.SchDoc | | Drawn By: |